STL100N6LF6

N-channel 60 V, 3.3 mΩ typ., 25 A STripFET™ VI DeepGATE™ Power MOSFET in a PowerFLAT™ 5x6 package

Datasheet — production data

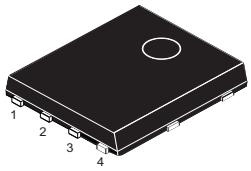

PowerFLAT™ 5x6

Figure 1. Internal schematic diagram

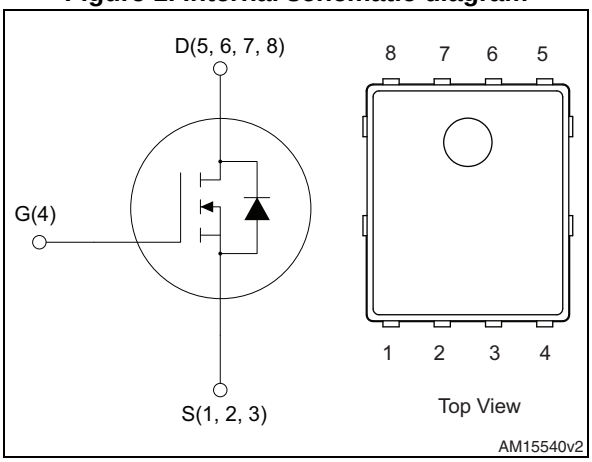

Features

Order code	V_{DS}	$R_{DS(on)}$ max	I_D
STL100N6LF6	60 V	4.4 mΩ	25 A

- Low gate charge
- Very low on-resistance
- High avalanche ruggedness

Applications

- Switching applications

Description

This device is an N-channel Power MOSFET developed using the 6th generation of STripFET™ DeepGATE™ technology, with a new gate structure. The resulting Power MOSFET exhibits the lowest $R_{DS(on)}$ in all packages.

Table 1. Device summary

Order code	Marking	Package	Packaging
STL100N6LF6	100N6LF6	PowerFLAT™ 5x6	Tape and reel

This is information on a product in full production. www.st.com

Contents

1 Electrical ratings 3

2 Electrical characteristics 4

2.1 Electrical characteristics (curves) 6

3 Test circuits 8

4 Package mechanical data 9

5 Packaging mechanical data 12

6 Revision history 14

1 Electrical ratings

Table 2. Absolute maximum ratings

Symbol	Parameter	Value	Unit
V_{DS}	Drain-source voltage	60	V
V_{GS}	Gate-source voltage	± 20	V
I_D (1)	Drain current (continuous) at T_C = 25 °C	130	A
I_D (2)	Drain current (continuous) at T_{pcb} = 25 °C	25	A
I_D (2)	Drain current (continuous) at T_{pcb}=100 °C	18	A
I_{DM} (3)	Drain current (pulsed)	100	A
P_{TOT} (2)	Total dissipation at T_{pcb} = 25 °C	4.8	W
T_{stg}	Storage temperature	- 55 to 175	°C
T_j	Operating junction temperature		

1. The value is rated according to R_{thj-c}
2. The value is rated according to $R_{thj-pcb}$
3. Pulse width limited by safe operating area

Table 3. Thermal data

Symbol	Parameter	Value	Unit
$R_{thj-pcb}$ (1)	Thermal resistance junction-pcb max	31.3	°C/W
$R_{thj-case}$	Thermal resistance junction-case max	1.13	°C/W

1. When mounted on FR-4 board of 1 inch², 2 oz Cu, t < 10 sec

Table 4. Avalanche characteristics

Symbol	Parameter	Max value	Unit
I_{AS}	Avalanche current, repetitive or not-repetitive (pulse width limited by T_j max)	10	A
E_{AS}	Single pulse avalanche energy (starting T_j = 25 °C, I_D = I_{AS}, V_{DD} = 52 V)	1370	mJ

2 Electrical characteristics

(T_J = 25 °C unless otherwise specified)

Table 5. On/off states

Symbol	Parameter	Test conditions	Min.	Typ.	Max.	Unit
$V_{(BR)DSS}$	Drain-source breakdown voltage	I_D = 1 mA, V_{GS}= 0	60			V
I_{DSS}	Zero gate voltage drain current (V_{GS} = 0)	V_{DS} = 60 V			1	µA
		V_{DS} = 60 V, T_C =125 °C			10	µA
I_{GSS}	Gate body leakage current (V_{DS} = 0)	V_{GS} = ±20 V			±100	nA
$V_{GS(th)}$	Gate threshold voltage	V_{DS}= V_{GS}, I_D = 250 µA	1		2.5	V
$R_{DS(on)}$	Static drain-source on-resistance	V_{GS}= 10 V, I_D= 11 A		3.3	4.4	mΩ
		V_{GS}= 4.5 V, I_D= 11 A		4.3	5.5	mΩ

Table 6. Dynamic

Symbol	Parameter	Test conditions	Min.	Typ.	Max.	Unit
C_{iss}	Input capacitance	V_{DS} =25 V, f = 1 MHz, V_{GS} = 0	-	6600	-	pF
C_{oss}	Output capacitance		-	670	-	pF
C_{rss}	Reverse transfer capacitance		-	315	-	pF
Q_g	Total gate charge	V_{DD} = 30 V, I_D = 20 A V_{GS} =10 V (see *Figure 14*)	-	121	-	nC
Q_{gs}	Gate-source charge		-	17	-	nC
Q_{gd}	Gate-drain charge		-	22	-	nC
R_g	Gate input resistance	f=1 MHz Gate DC Bias=0 test signal level=20 mV I_D=0	-	1.2	-	Ω

Table 7. Switching times

Symbol	Parameter	Test conditions	Min.	Typ.	Max.	Unit
$t_{d(on)}$	Turn-on delay time	V_{DD}= 30 V, I_D= 20A, R_G=4.7 Ω, V_{GS}=10 V (see *Figure 13*)	-	20	-	ns
t_r	Rise time		-	13	-	ns
$t_{d(off)}$	Turn-off delay time		-	108	-	ns
t_f	Fall time		-	22	-	ns

Table 8. Source drain diode

Symbol	Parameter	Test conditions	Min.	Typ.	Max	Unit
I_{SD}	Source-drain current		-		22	A
I_{SDM}(1)	Source-drain current (pulsed)		-		84	A
V_{SD}(2)	Forward on voltage	I_{SD} = 22 A, V_{GS} = 0	-		1.3	V
t_{rr}	Reverse recovery time	I_{SD} = 20 A, di/dt = 100 A/µs, V_{DD}= 48V, T_J = 150 °C (see *Figure 15*)	-	34		ns
Q_{rr}	Reverse recovery charge		-	44		nC
I_{RRM}	Reverse recovery current		-	2.6		A

1. Pulse width limited by safe operating area
2. Pulsed: pulse duration=300µs, duty cycle 1.5%

2.1 Electrical characteristics (curves)

Figure 2. Safe operating area

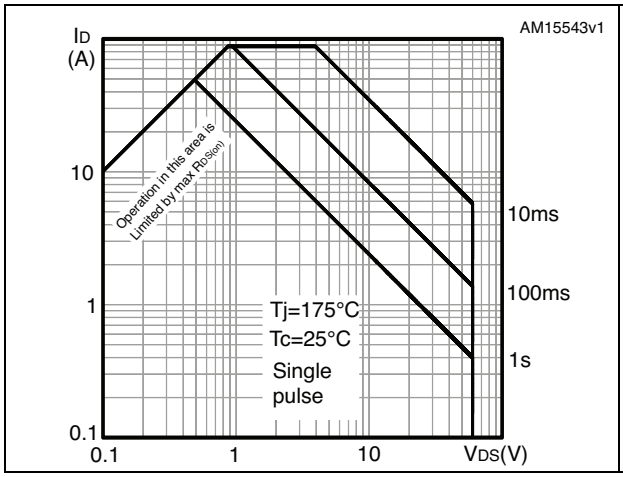

Figure 3. Thermal impedance

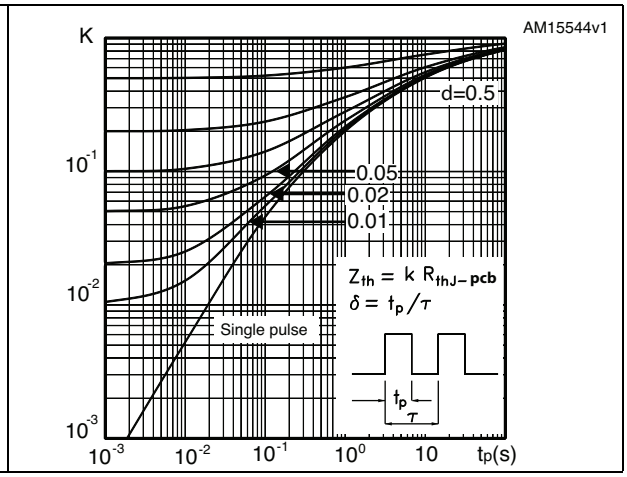

Figure 4. Output characteristics

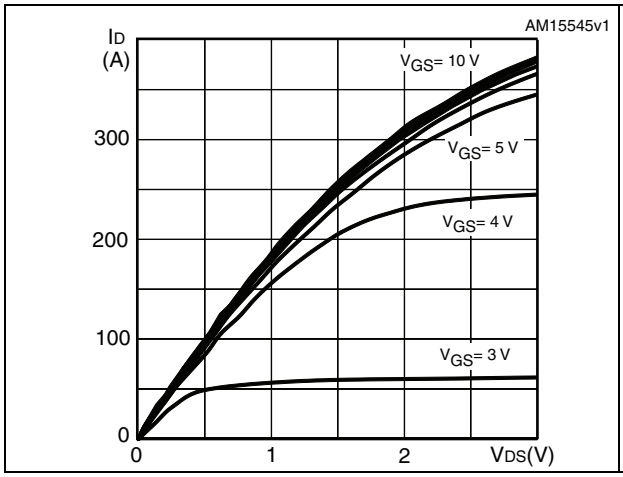

Figure 5. Transfer characteristics

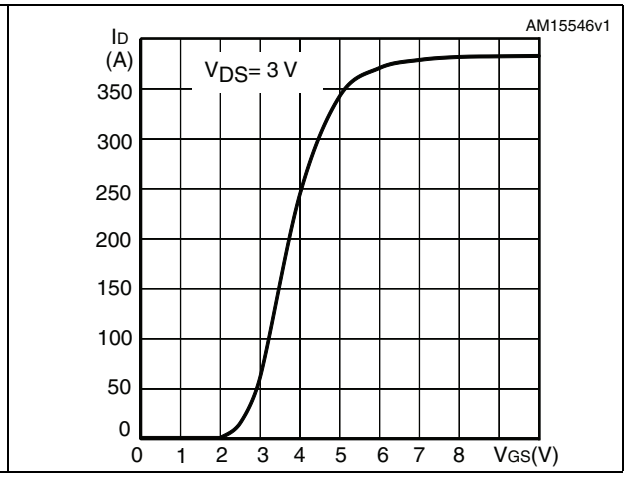

Figure 6. Gate charge vs gate-source voltage

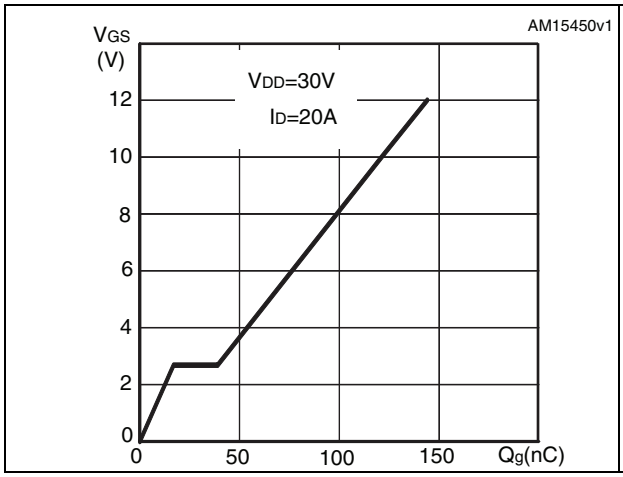

Figure 7. Static drain-source on-resistance

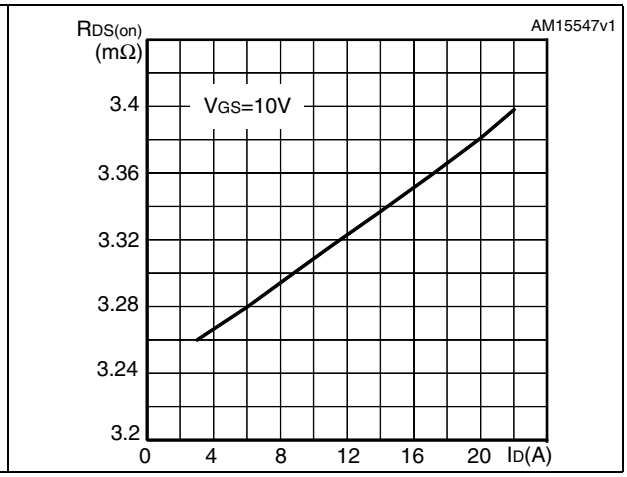

Figure 8. Capacitance variations

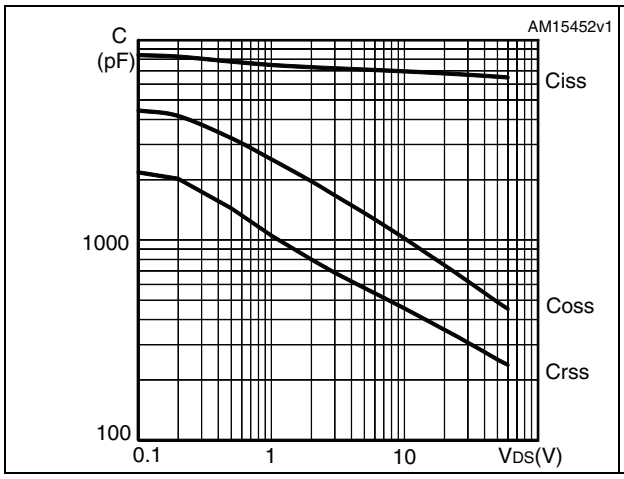

Figure 9. Source-drain diode forward characteristics

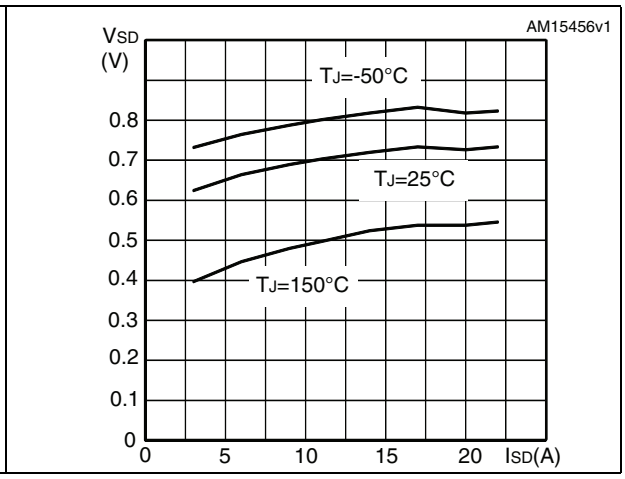

Figure 10. Normalized gate threshold voltage vs temperature

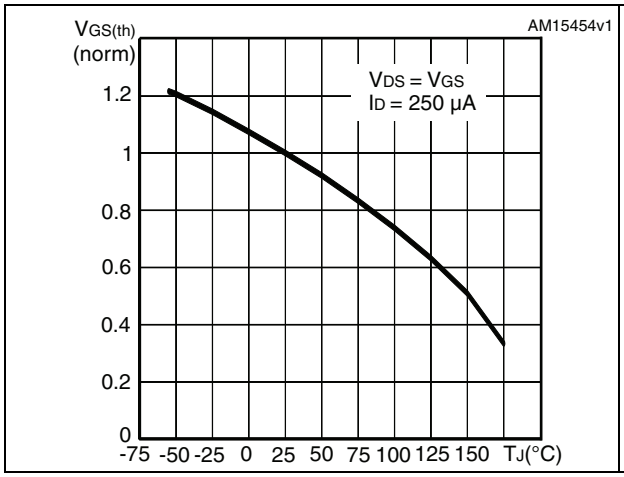

Figure 11. Normalized on-resistance vs temperature

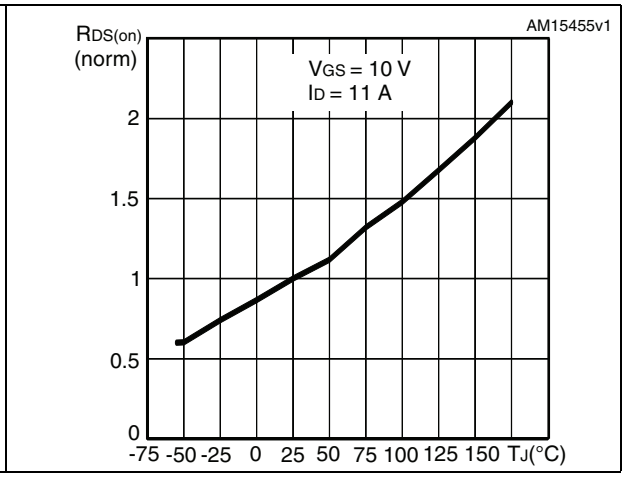

Figure 12. Normalized V_{DS} vs temperature

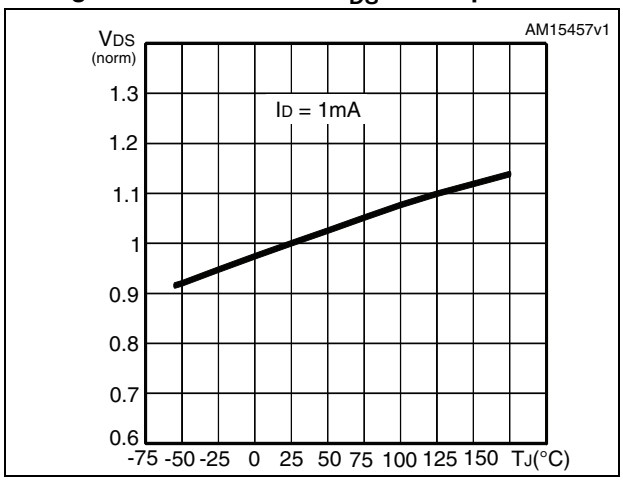

3 Test circuits

Figure 13. Switching times test circuit for resistive load

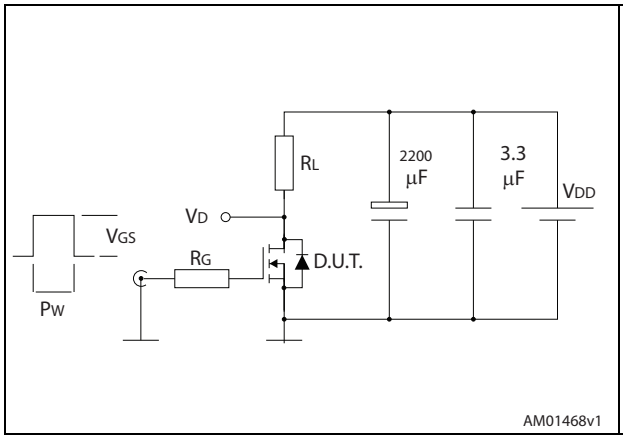

Figure 14. Gate charge test circuit

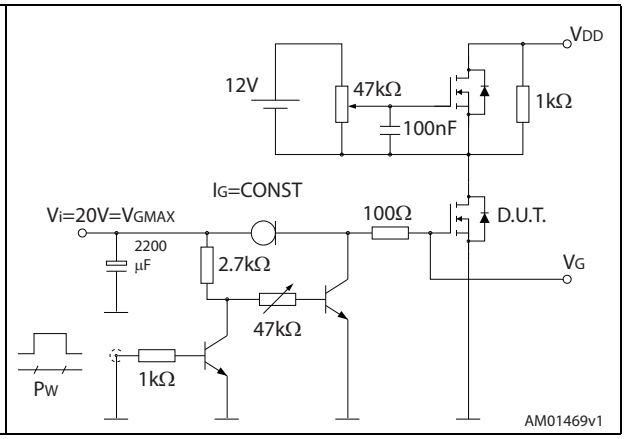

Figure 15. Test circuit for inductive load switching and diode recovery times

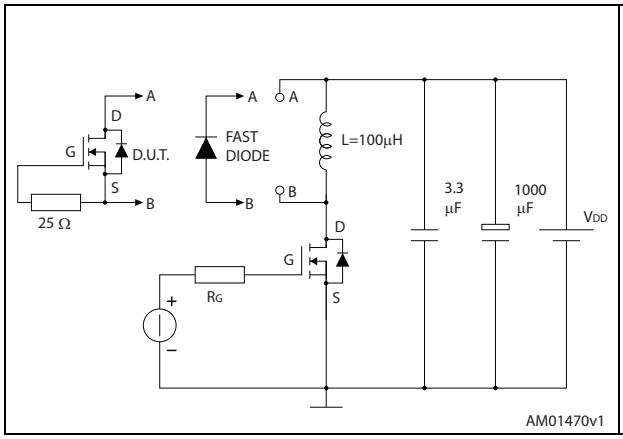

Figure 16. Unclamped inductive load test circuit

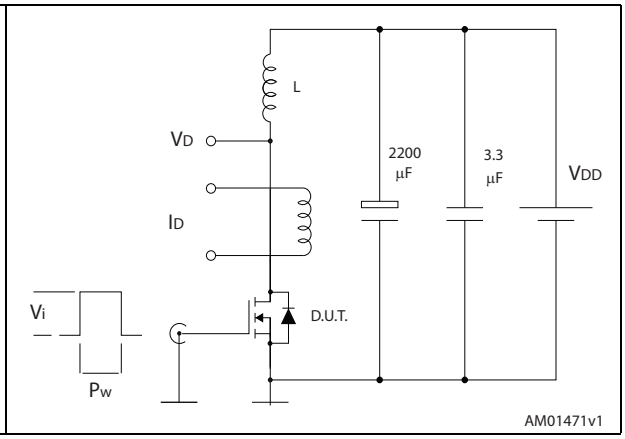

Figure 17. Unclamped inductive waveform

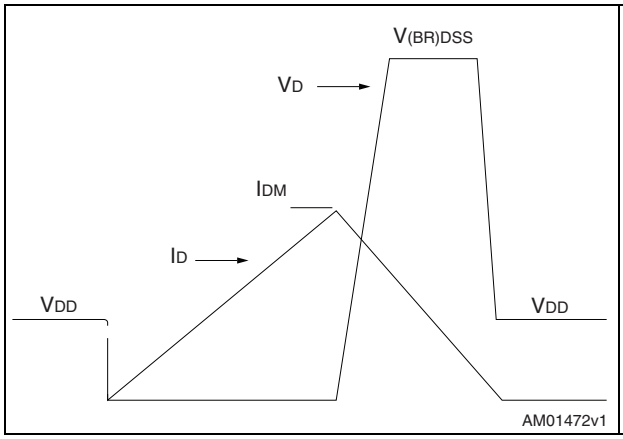

Figure 18. Switching time waveform

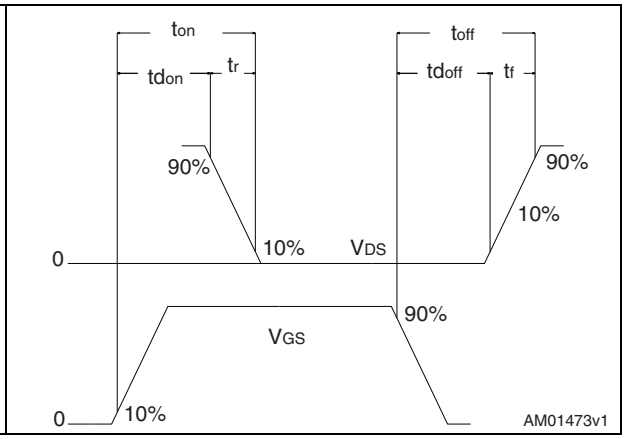

4 Package mechanical data

In order to meet environmental requirements, ST offers these devices in different grades of ECOPACK® packages, depending on their level of environmental compliance. ECOPACK® specifications, grade definitions and product status are available at: *www.st.com*. ECOPACK® is an ST trademark.

Figure 19. PowerFLAT™ 5x6 type S-C mechanical data

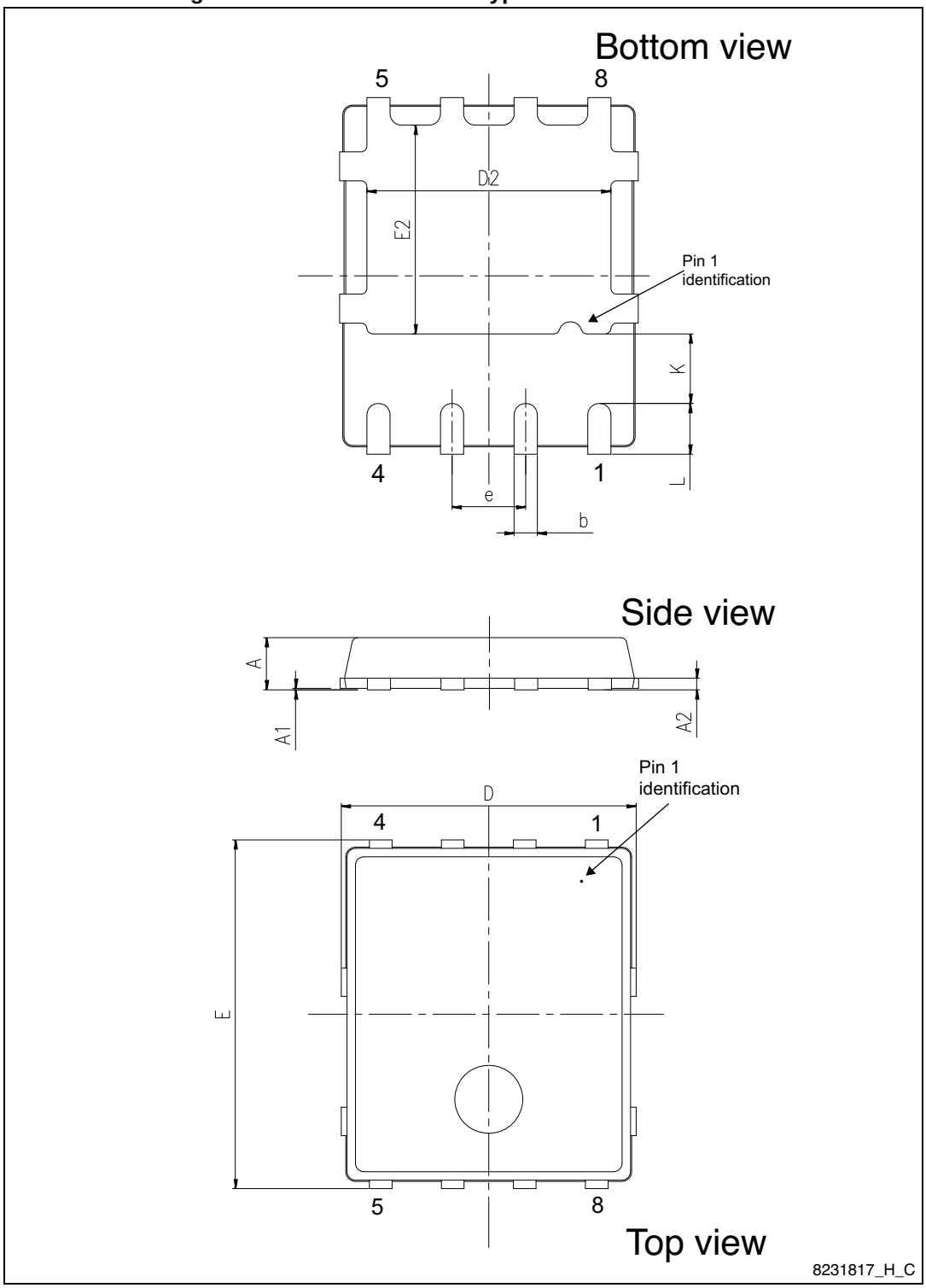

Table 9. PowerFLAT™ 5x6 type S-C mechanical data

Dim.	mm		
	Min.	Typ.	Max.
A	0.80		1.00
A1	0.02		0.05
A2		0.25	
b	0.30		0.50
D		5.20	
E		6.15	
D2	4.11		4.31
E2	3.50		3.70
e		1.27	
e1		0.65	
L	0.715		1.015
K	1.05		1.35

Figure 20. PowerFLAT™ 5x6 recommended footprint (dimensions in mm)

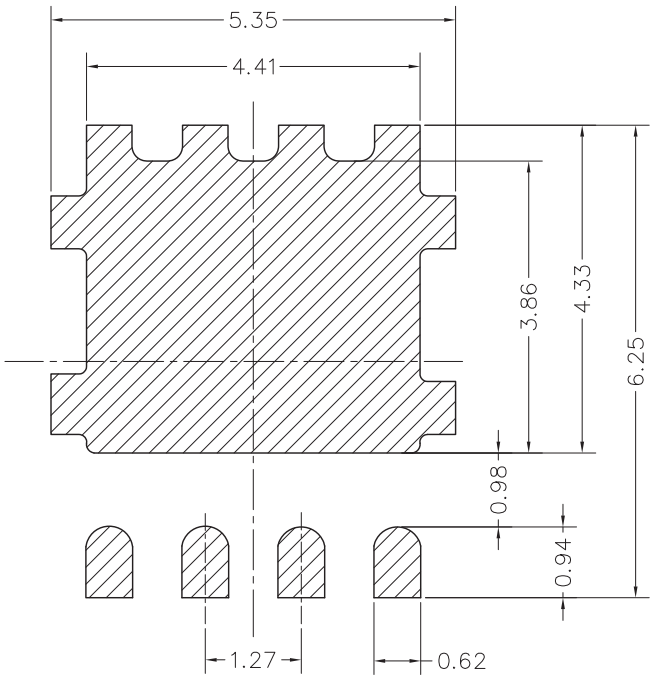

Footprint

5 Packaging mechanical data

Figure 21. PowerFLAT™ 5x6 tape[a]

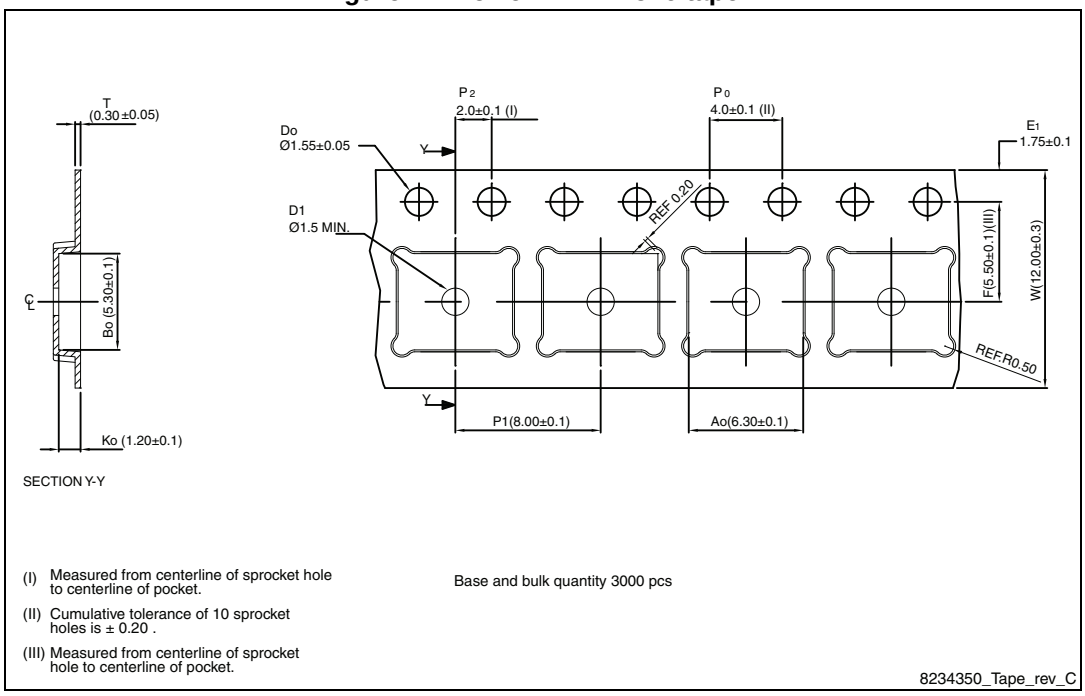

Figure 22. PowerFLAT™ 5x6 package orientation in carrier tape.

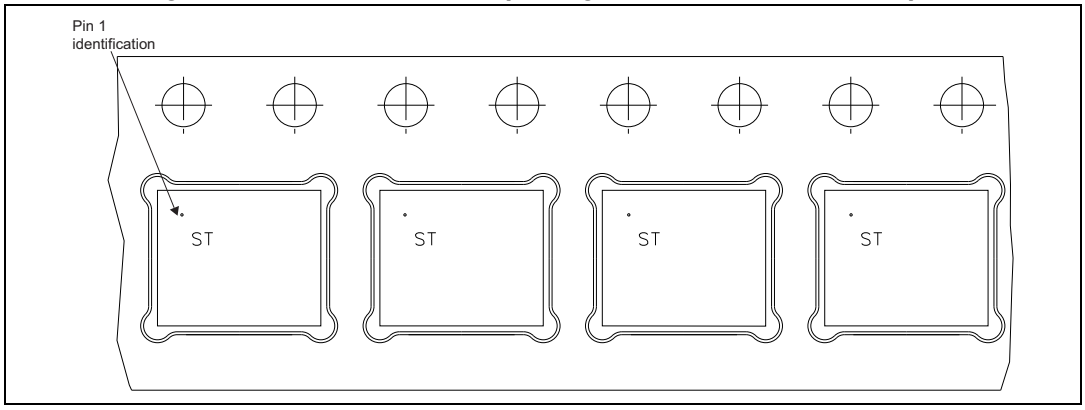

a. All dimensions are in millimeters.

Figure 23. PowerFLAT™ 5x6 reel

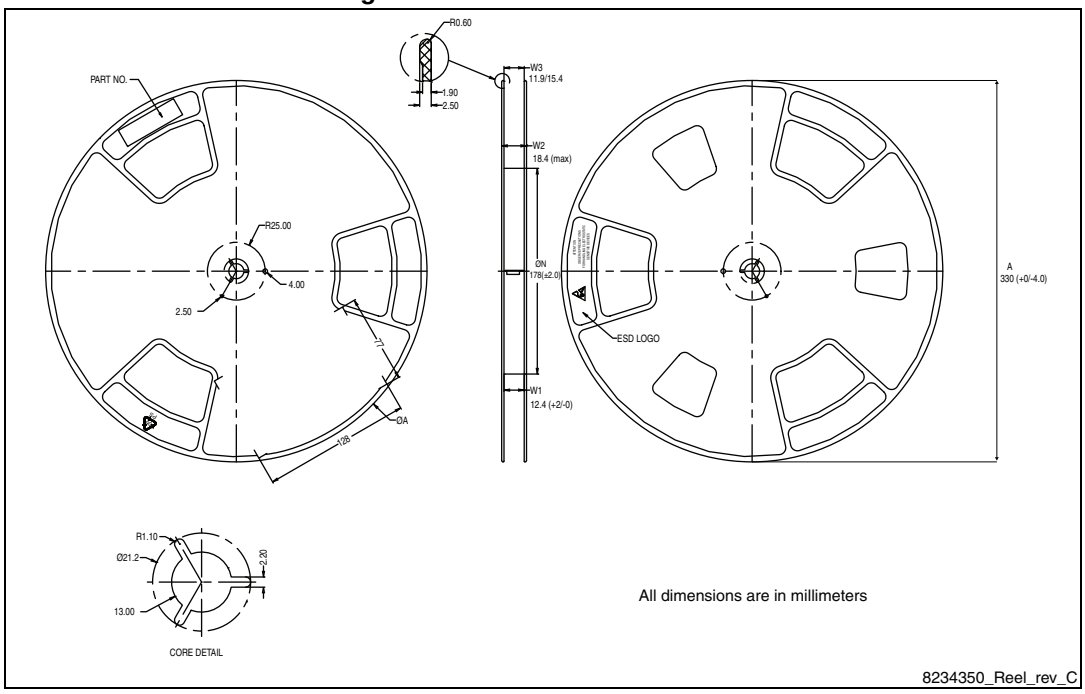

6 Revision history

Table 10. Document revision history

Date	Revision	Changes
24-Feb-2011	1	First release
10-Nov-2011	2	*Section 4: Package mechanical data* has been updated. Minor text changes.
10-Mar-2014	3	– Updated: title on the cover page. – Modified: $R_{DS(on)}$ and I_D values on cover page – Modified: drain current (continuous) at T_C = 25 °C, drain current (continuous) at T_{pcb} = 25 °C, drain current (continuous) at T_{pcb}=100 °C, I_{DM}, total dissipation at T_{pcb} = 25 °C, T_{stg} and T_j values on table 2, $R_{thj\text{-}case}$ value on *Table 3*, max values on *Table 4*, $R_{DS(on)}$ typ and max. values, typical values on *Table 6*, *7* and *8* – Inserted: *Section 2.1: Electrical characteristics (curves)* – Updated: *Section 4: Package mechanical data* – Added: *Section 5: Packaging mechanical data* – Minor text changes

Please Read Carefully:

Information in this document is provided solely in connection with ST products. STMicroelectronics NV and its subsidiaries (“ST”) reserve the right to make changes, corrections, modifications or improvements, to this document, and the products and services described herein at any time, without notice.

All ST products are sold pursuant to ST’s terms and conditions of sale.

Purchasers are solely responsible for the choice, selection and use of the ST products and services described herein, and ST assumes no liability whatsoever relating to the choice, selection or use of the ST products and services described herein.

No license, express or implied, by estoppel or otherwise, to any intellectual property rights is granted under this document. If any part of this document refers to any third party products or services it shall not be deemed a license grant by ST for the use of such third party products or services, or any intellectual property contained therein or considered as a warranty covering the use in any manner whatsoever of such third party products or services or any intellectual property contained therein.

UNLESS OTHERWISE SET FORTH IN ST’S TERMS AND CONDITIONS OF SALE ST DISCLAIMS ANY EXPRESS OR IMPLIED WARRANTY WITH RESPECT TO THE USE AND/OR SALE OF ST PRODUCTS INCLUDING WITHOUT LIMITATION IMPLIED WARRANTIES OF MERCHANTABILITY, FITNESS FOR A PARTICULAR PURPOSE (AND THEIR EQUIVALENTS UNDER THE LAWS OF ANY JURISDICTION), OR INFRINGEMENT OF ANY PATENT, COPYRIGHT OR OTHER INTELLECTUAL PROPERTY RIGHT.

ST PRODUCTS ARE NOT DESIGNED OR AUTHORIZED FOR USE IN: (A) SAFETY CRITICAL APPLICATIONS SUCH AS LIFE SUPPORTING, ACTIVE IMPLANTED DEVICES OR SYSTEMS WITH PRODUCT FUNCTIONAL SAFETY REQUIREMENTS; (B) AERONAUTIC APPLICATIONS; (C) AUTOMOTIVE APPLICATIONS OR ENVIRONMENTS, AND/OR (D) AEROSPACE APPLICATIONS OR ENVIRONMENTS. WHERE ST PRODUCTS ARE NOT DESIGNED FOR SUCH USE, THE PURCHASER SHALL USE PRODUCTS AT PURCHASER’S SOLE RISK, EVEN IF ST HAS BEEN INFORMED IN WRITING OF SUCH USAGE, UNLESS A PRODUCT IS EXPRESSLY DESIGNATED BY ST AS BEING INTENDED FOR “AUTOMOTIVE, AUTOMOTIVE SAFETY OR MEDICAL” INDUSTRY DOMAINS ACCORDING TO ST PRODUCT DESIGN SPECIFICATIONS. PRODUCTS FORMALLY ESCC, QML OR JAN QUALIFIED ARE DEEMED SUITABLE FOR USE IN AEROSPACE BY THE CORRESPONDING GOVERNMENTAL AGENCY.

Resale of ST products with provisions different from the statements and/or technical features set forth in this document shall immediately void any warranty granted by ST for the ST product or service described herein and shall not create or extend in any manner whatsoever, any liability of ST.

ST and the ST logo are trademarks or registered trademarks of ST in various countries.
Information in this document supersedes and replaces all information previously supplied.
The ST logo is a registered trademark of STMicroelectronics. All other names are the property of their respective owners.

© 2014 STMicroelectronics - All rights reserved

STMicroelectronics group of companies

Australia - Belgium - Brazil - Canada - China - Czech Republic - Finland - France - Germany - Hong Kong - India - Israel - Italy - Japan - Malaysia - Malta - Morocco - Philippines - Singapore - Spain - Sweden - Switzerland - United Kingdom - United States of America

www.st.com